INSTALLATION INSTRUCTIONS
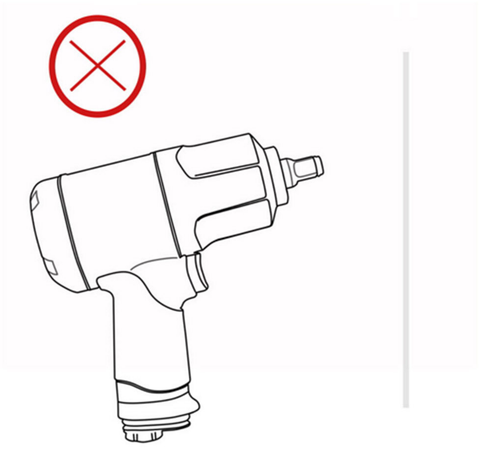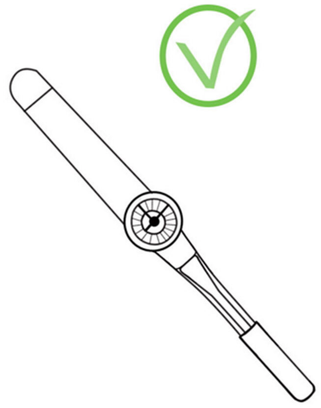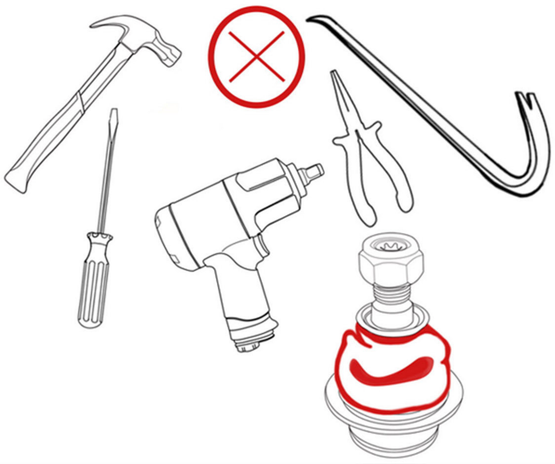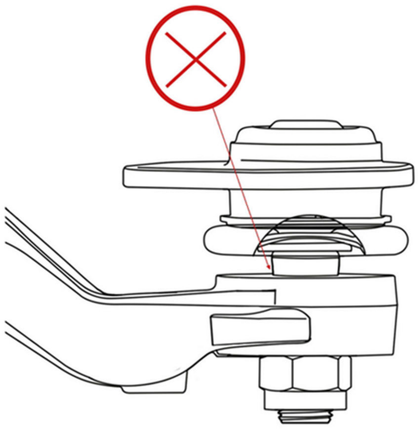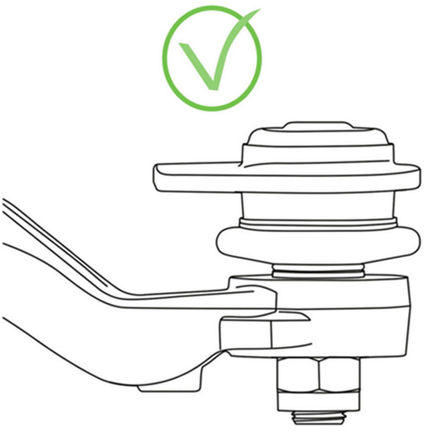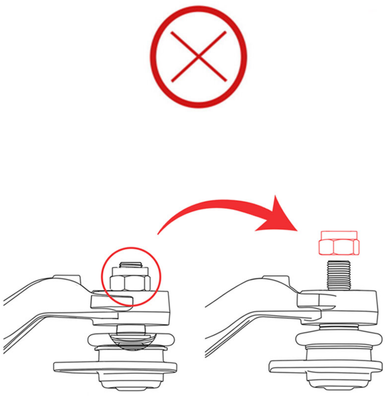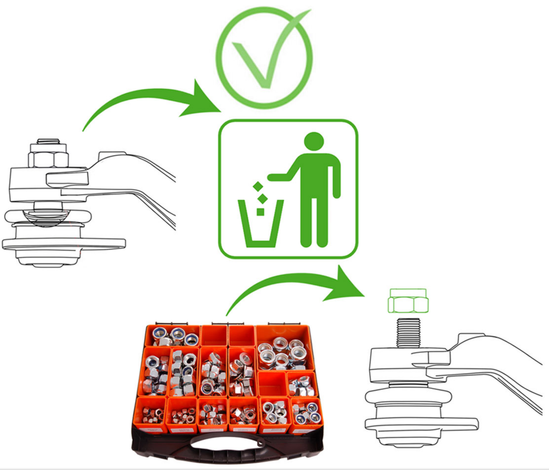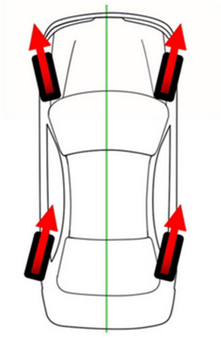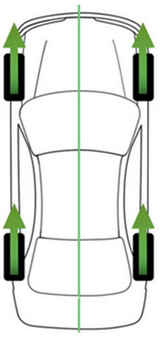
SIDEM
Steering in safety