SERVICE
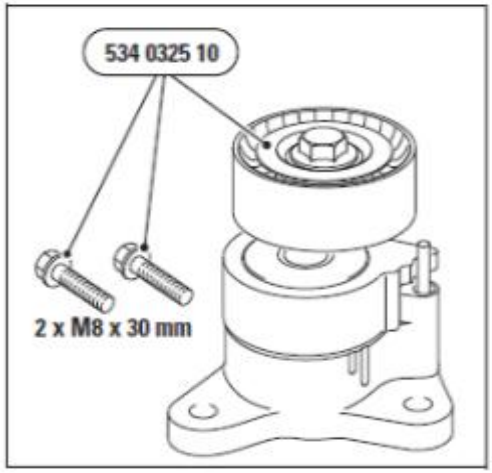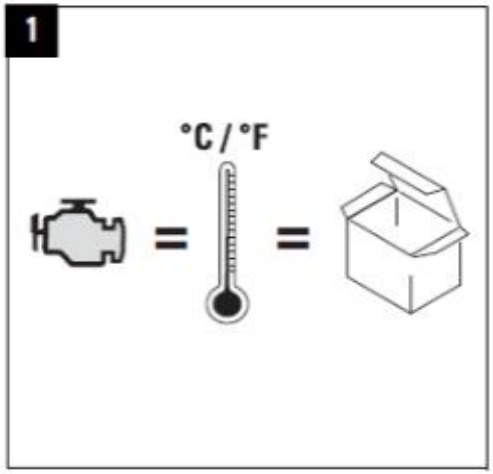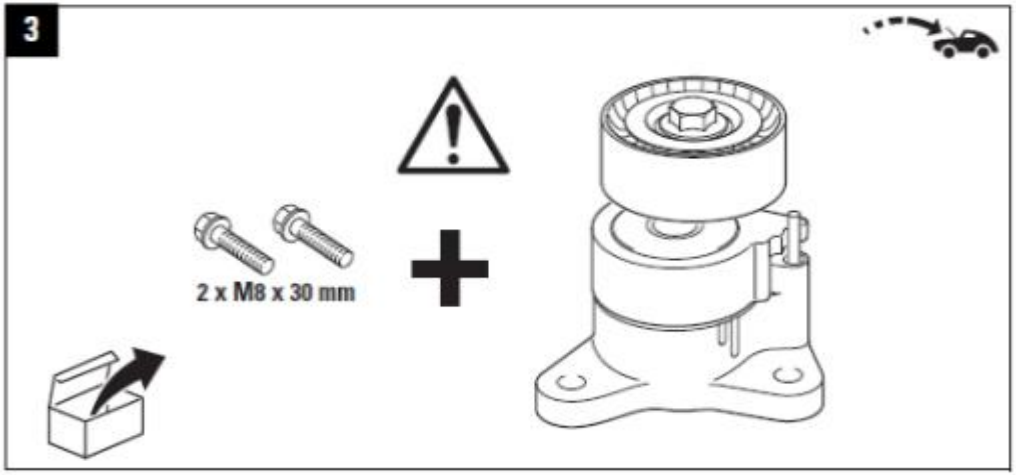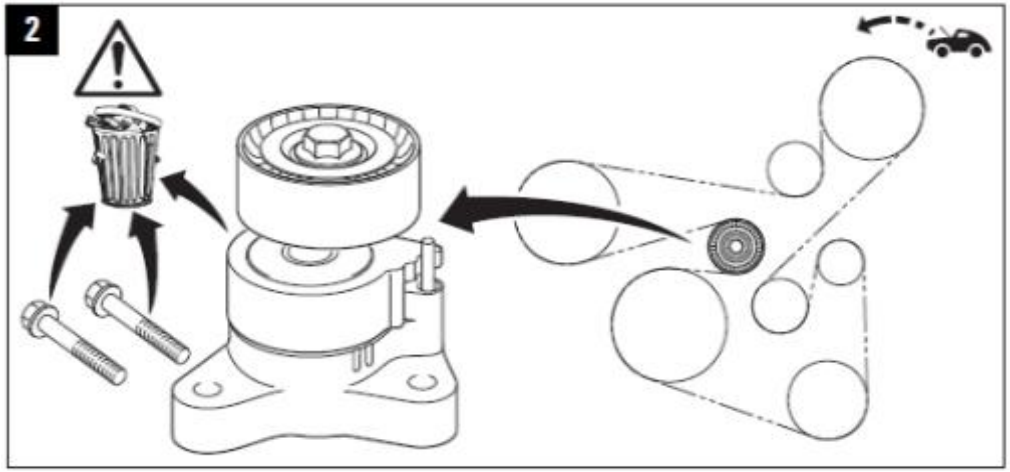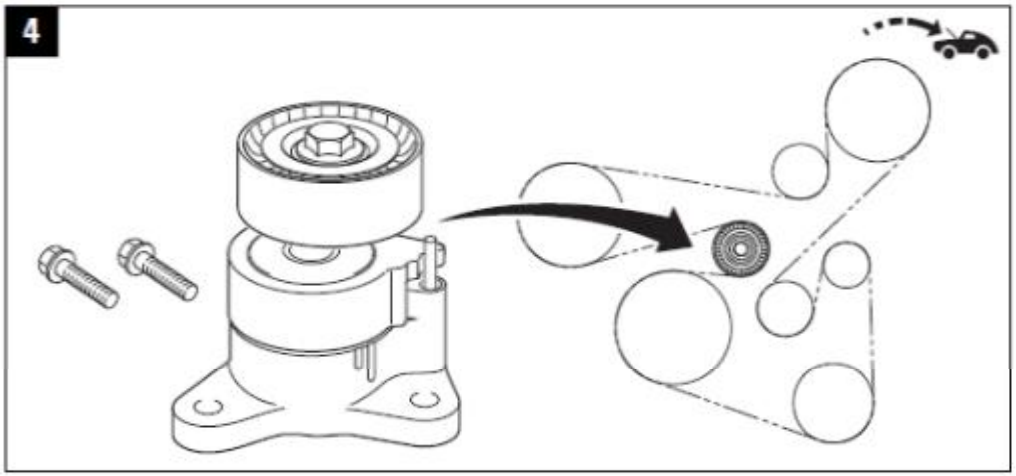
SERVICE