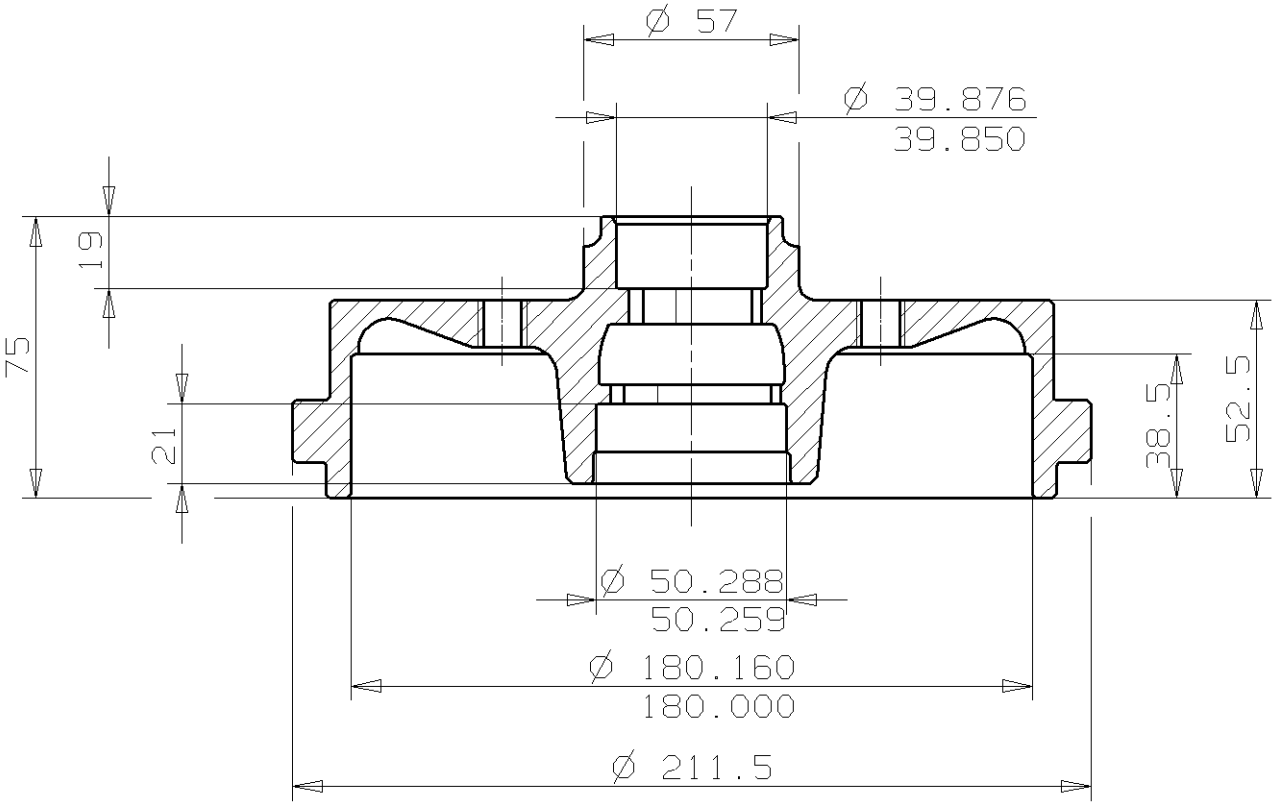

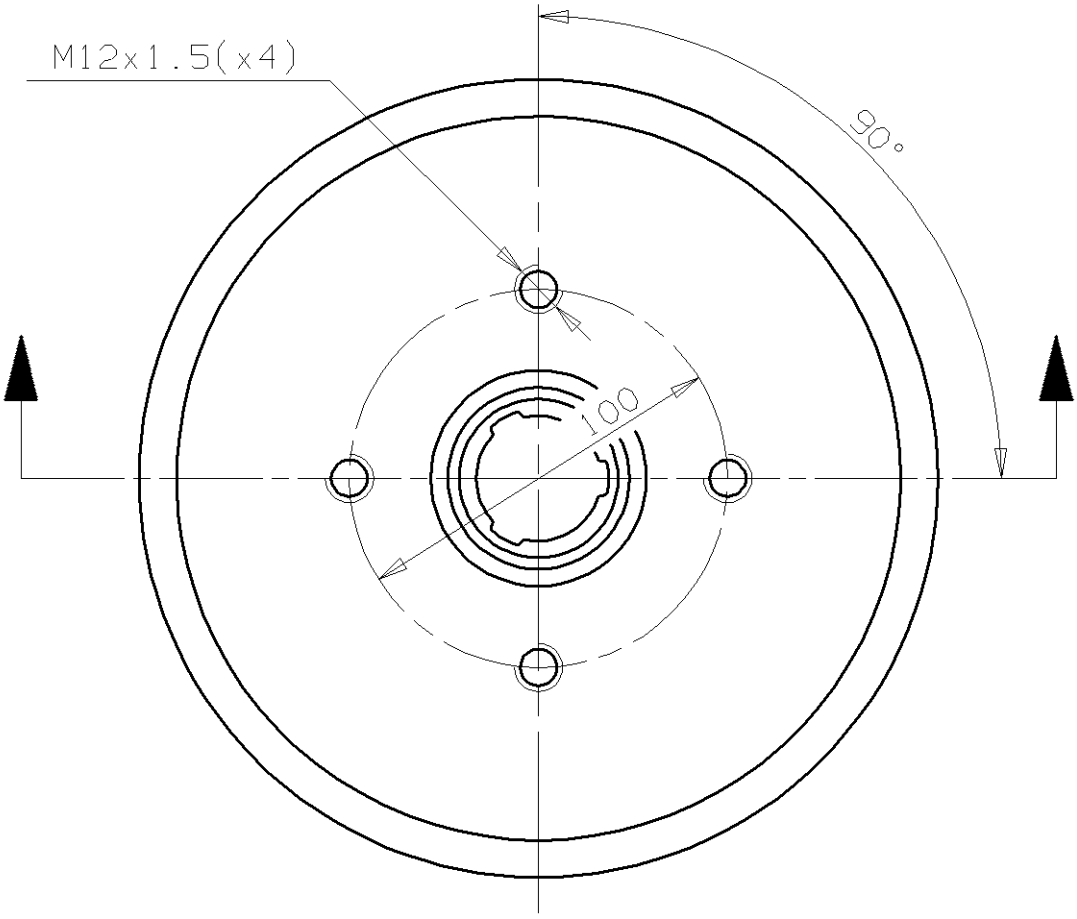

Max.DIA. 181 mm

Weight 4.2 Kg