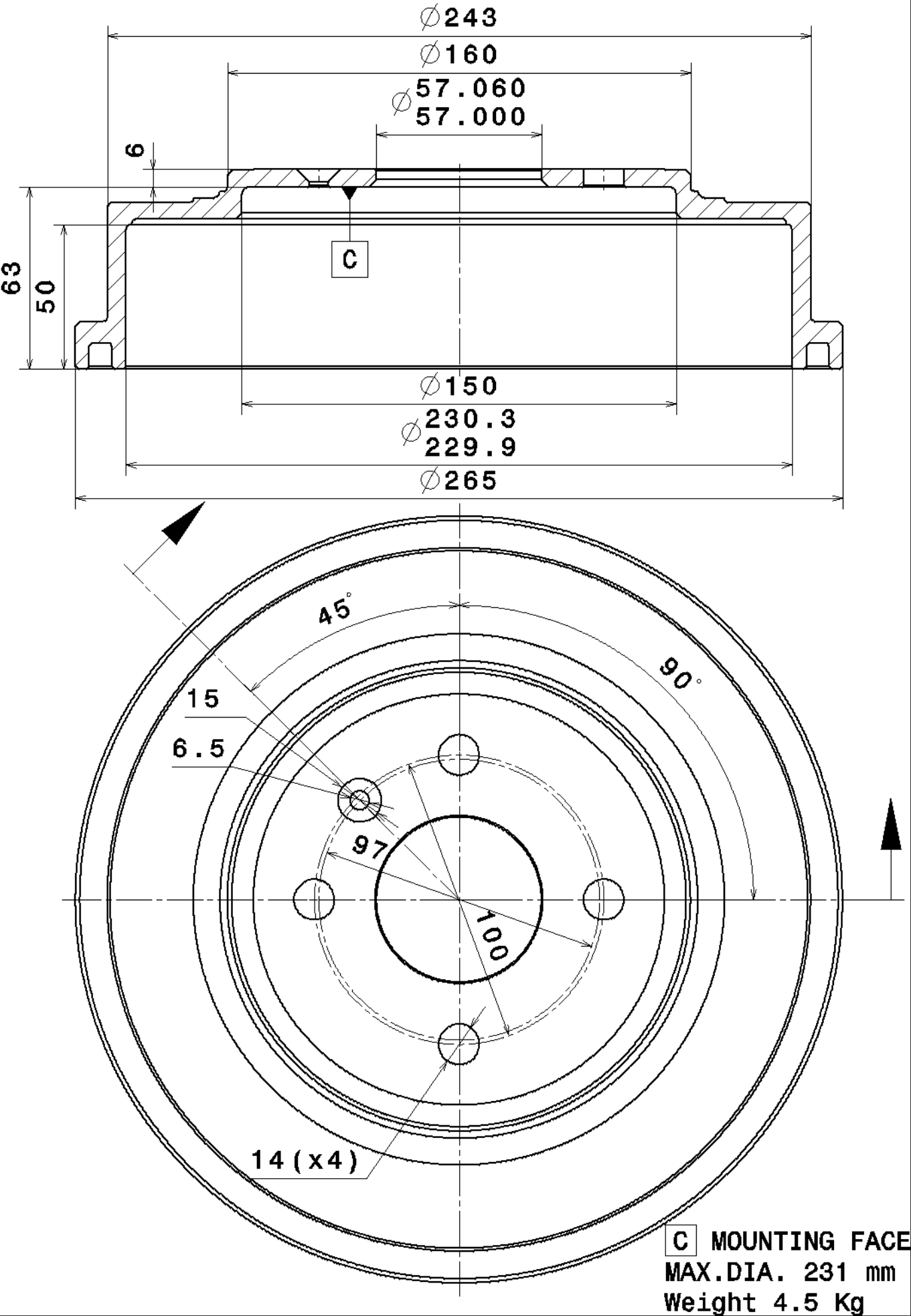
∅243
∅160
∅57.060
57.000
6
63
50
C
∅150
∅230.3
229.9
∅265
45°
90°
15
6.5
97
100
14(x4)
C MOUNTING FACE
MAX.DIA. 231 mm
Weight 4.5 Kg